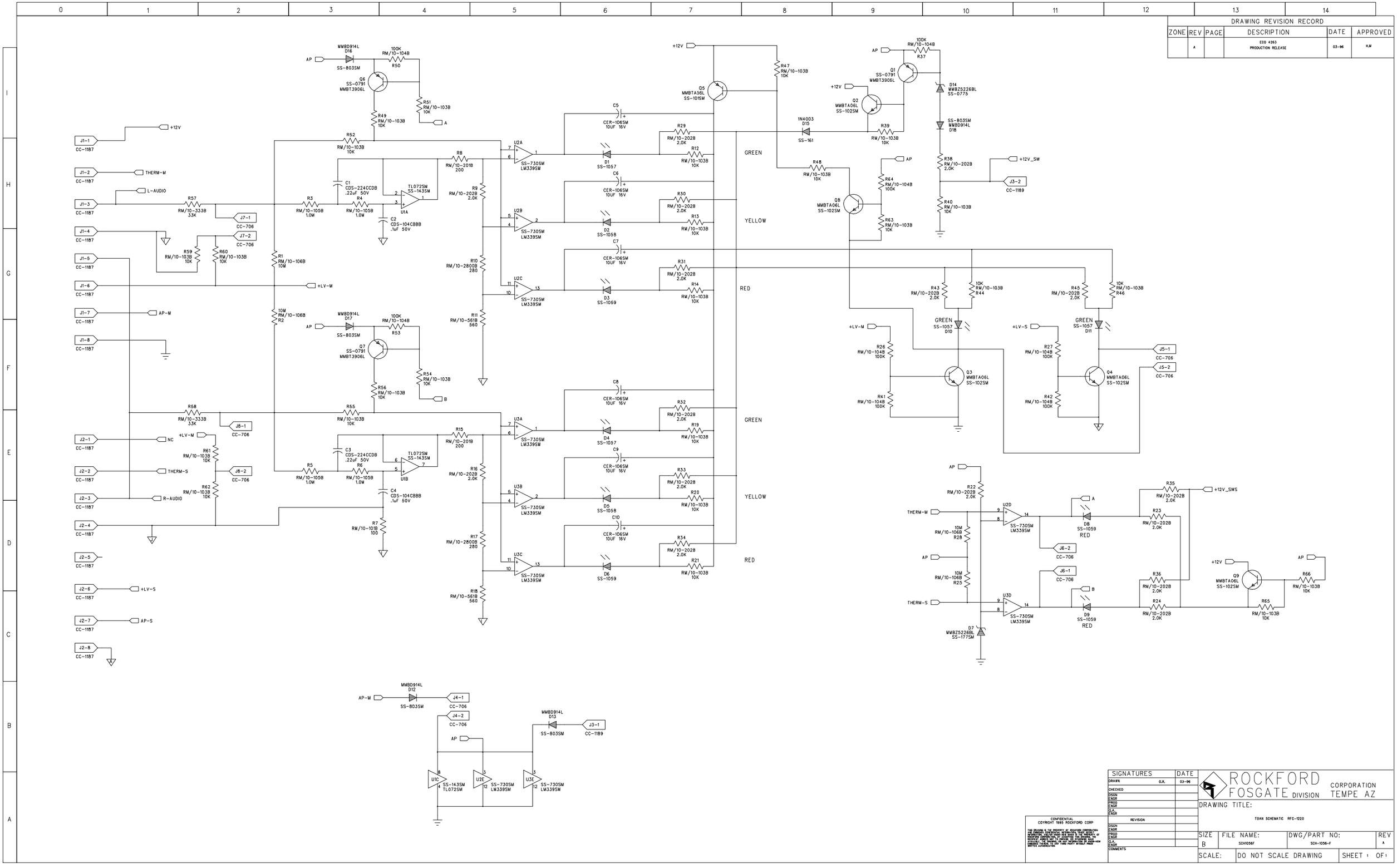

DRAWING REVISION RECORD
ZONE | REV | PAGE | DESCRIPTION | DATE | APPROVED
A | ECO 4263 PRODUCTION RELEASE | 03-96 | HLM
GREEN
YELLOW
RED
GREEN
YELLOW
RED
SIGNATURES | DATE
DRAWN G.R. 03-96
CHECKED
DSGN
ENGR
PROD
ENGR
Q.A.
ENGR
REVISION
DSGN
ENGR
PROD
ENGR
Q.A.
ENGR
COMMENTS
CONFIDENTIAL
COYRIGHT 1995 ROCKFORD CORP
ROCKFORD FOSGATE DIVISION
CORPORATION TEMPE AZ
DRAWING TITLE:
TOAN SCHEMATIC RFC-1220
SIZE B
FILE NAME: SCH1056F
DWG/PART NO: SCH-1056-F
REV A
SCALE:
DO NOT SCALE DRAWING
SHEET 1 OF 1